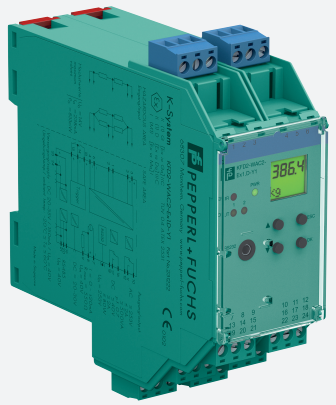

Strain Gauge Converter

KFD2-WAC2-Ex1.D-Y1

- 1-channel isolated barrier
- 24 V DC supply (Power Rail)
- Strain gauge input (full or half bridge)
- Output 0 mA ... ± 20 mA or 0 V ... ± 10 V
- 2 relay contact outputs
- Programmable high/low alarm
- Configurable by PACTware or keypad
- RS-485 interface
- Low response time
- Line fault detection (LFD)

Function

This isolated barrier is used for intrinsic safety applications.
The device is used with strain gauges, load cells and resistance measuring bridges.
Designed to provide 5 V excitation voltage, this barrier's high quality A/D converter allows it to be used with those devices requiring 10 V.
Up to four 350 Ω strain gauges connected in parallel may be powered and evaluated.
The device is easily configured by the use of keypad or with the PACTware configuration software.
The current measurement for tare, zero point, and final value can be entered in this manner.
A fault is signalized by LEDs and a separate collective error message output.
For additional information, refer to the manual and www.pepperl-fuchs.com.

Connection

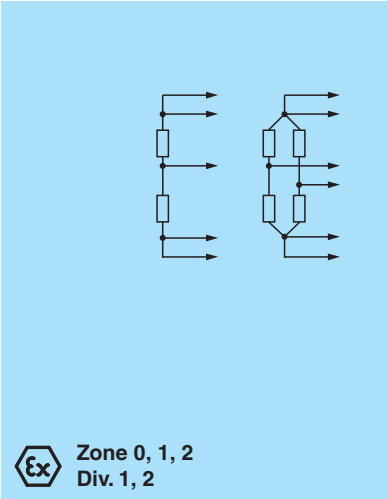

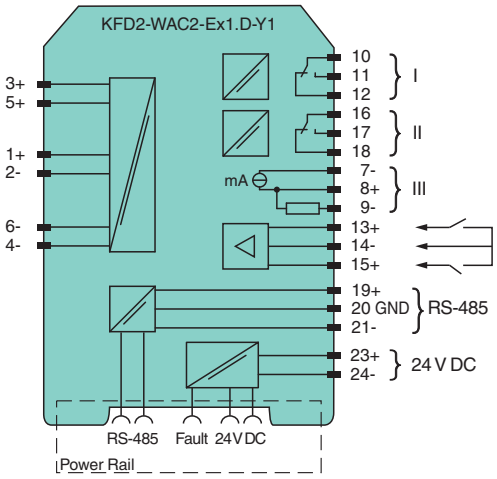

Technical Data

General specifications		
Signal type		Analog input
Supply		
Connection		Power Rail or terminals 23+, 24-
Rated voltage	U_r	20 ... 35 V DC
Ripple		within the supply tolerance
Power consumption		max. 3 W
Interface		
Connection		Power Rail or terminals 19+, 20 GND, 21-

Release date: 2021-11-25 Date of issue: 2021-11-25 Filename: 231222_eng.pdf

Technical Data

Type	RS-485
Programming interface	programming socket
Field circuit	
Connection	terminals 1+, 2-, 3+, 4-, 5+, 6-
Lead resistance	max. 25 Ω per line
Input I	
Connection	terminals 1+, 2-
Sensor supply	1 ... 5 V
Connection	terminals 3+, 4- (supply); 5+, 6- (signal)
Short-circuit current	50 mA
Load	≥ 116 Ω up to 5V, ≥ 85 Ω up to 4V
Input	
Connection side	field side
Connection	Input I: terminals 1+, 2-; Input II: terminals 13+, 14-; Input III: terminals 15+, 14-
Programmable Tare	0 ... 500 % of span
Input I	Signal, analog
Input signal	-100 ... 100 mV
Input resistance	> 1 MΩ for voltage measurement
Input II, III	tare adjustment, calibration and zero
Open circuit voltage/short-circuit current	18 V / 5 mA
Active/Passive	I > 4 mA/I < 1.5 mA
Output	
Connection side	control side
Connection	Output I: terminals 10, 11, 12; Output II: terminals 16, 17, 18; Output III: terminals 7-, 8+, 9-
Output I, II	Relay output
Contact loading	253 V AC/2 A/500 VA/cos ϕ min. 0.7; 40 V DC/2 A resistive load
Mechanical life	2 x 10^7 switching cycles
Output III	Analog output
Current range	-20 ... 20 mA
Load	max. 550 Ω
Analog voltage output	0 ... ± 10 V; output resistance 500 Ω (bridge between terminal 7 and 9)
Analog current output	0 ... ± 20 mA or 4 ... 20 mA; load 0 ... 550 Ω (terminals 7 and 8)
Line fault detection	downscale -21.5 mA (-10.75 V) or 2 mA (1 V), upscale 21.5 mA (10.75 V)
Collective error message	Power Rail
Transfer characteristics	
Deviation	
Resolution/accuracy	≤ ± 0.2 % incl. non-linearity and hysteresis
Temperature effect	≤ ± 0.01 %/K
Reaction time	150 ms
Galvanic isolation	
Input I/other circuits	reinforced insulation according to IEC/EN 61010-1, rated insulation voltage 300 V_{eff}
Output I, II against eachother	reinforced insulation according to IEC/EN 61010-1, rated insulation voltage 300 V_{eff}
Output I, II/other circuits	reinforced insulation according to IEC/EN 61010-1, rated insulation voltage 300 V_{eff}
Output III/Input II, III	not available
Output III/Programming socket	not available
Other circuits from each other	functional insulation, rated insulation voltage 50 V_{eff}
Indicators/settings	
Display elements	LEDs , display
Control elements	Control panel
Configuration	via operating buttons via PACTware
Labeling	space for labeling at the front
Directive conformity	

Release date: 2021-11-25 Date of issue: 2021-11-25 Filename: 231222_eng.pdf

Technical Data

Electromagnetic compatibility		
Directive 2014/30/EU		EN 61326-1:2013 (industrial locations)
Low voltage		
Directive 2014/35/EU		EN 61010-1:2010
Conformity		
Electromagnetic compatibility		NE 21:2006
Degree of protection		IEC 60529:2001
Ambient conditions		
Ambient temperature		-20 ... 60 °C (-4 ... 140 °F)
Mechanical specifications		
Degree of protection		IP20
Connection		screw terminals
Mass		approx. 250 g
Dimensions		40 x 119 x 115 mm (1.6 x 4.7 x 4.5 inch) (W x H x D) , housing type C2
Mounting		on 35 mm DIN mounting rail acc. to EN 60715:2001
Data for application in connection with hazardous areas		
EU-type examination certificate		TÜV 04 ATEX 2531
Marking		Ⓔx II (1)G [Ex ia Ga] IIC Ⓔx II (1)D [Ex ia Da] IIIC Ⓔx I (M1) [Ex ia Ma] I
Supply		Power Rail or terminals 23+, 24- non-intrinsically safe
Maximum safe voltage	U_m	40 V DC (Attention! U_m is no rated voltage.)
Input I		terminals 1+, 2- Ex ia IIC, Ex iaD
Voltage U_o		14 V
Current I_o		238 mA
Power P_o		833 mW (linear characteristic)
Input II and III		terminals 13+, 14-; 15+, 14- non-intrinsically safe
Maximum safe voltage U_m		40 V DC (Attention! U_m is no rated voltage.)
Output I, II		terminals 10, 11, 12; 16, 17, 18 non-intrinsically safe
Maximum safe voltage	U_m	253 V AC / 40 V DC (Attention! U_m is no rated voltage.)
Contact loading		253 V AC/2 A/500 VA/cos ϕ min. 0.7; 40 V DC/2 A resistive load
Output III		terminals 7-, 8+, 9- non-intrinsically safe
Maximum safe voltage U_m	U_m	40 V DC (Attention! U_m is no rated voltage.)
Interface		RS 485 programming jack
Maximum safe voltage	U_m	40 V DC (Attention! U_m is no rated voltage.)
Galvanic isolation		
Input I/other circuits		safe electrical isolation acc. to IEC/EN 60079-11, voltage peak value 375 V
Directive conformity		
Directive 2014/34/EU		EN 60079-0:2012+A11:2013 , EN 60079-11:2012
International approvals		
FM approval		
Control drawing		116-0302 (cFMus)
UL approval		E223772
IECEx approval		
IECEx certificate		IECEx TUN 06.0005
IECEx marking		[Ex ia Ga] IIC , [Ex ia Da] IIIC , [Ex ia Ma] I
General information		
Supplementary information		Observe the certificates, declarations of conformity, instruction manuals, and manuals where applicable. For information see www.pepperl-fuchs.com.

Release date: 2021-11-25 Date of issue: 2021-11-25 Filename: 231222_eng.pdf

Assembly

Front view

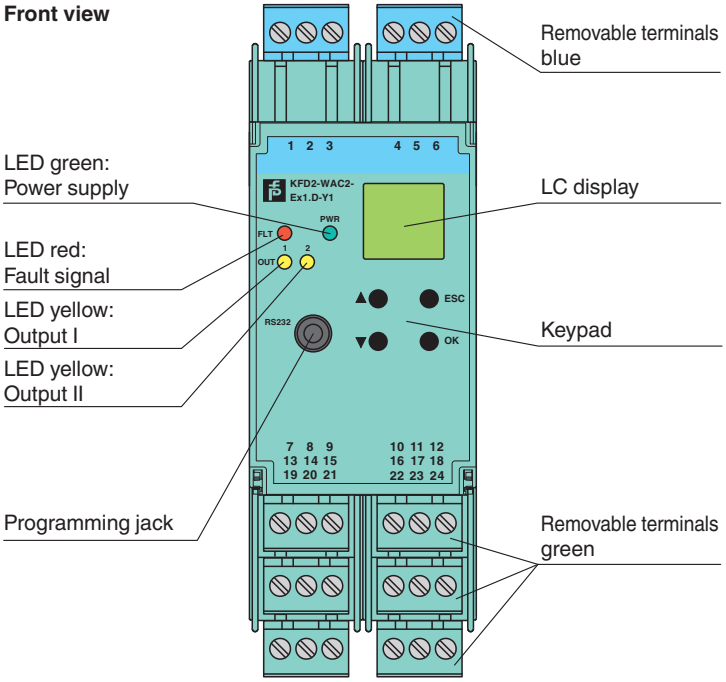

Matching System Components

	**DTM Interface Technology**	Device type manager (DTM) for interface technology
	**PACTware 5.X**	FDT Framework
	**K-ADP-USB**	Programming adapter with USB interface
	**KFD2-EB2**	Power Feed Module
	**UPR-03**	Universal Power Rail with end caps and cover, 3 conductors, length: 2 m
	**UPR-03-M**	Universal Power Rail with end caps and cover, 3 conductors, length: 1,6 m
	**UPR-03-S**	Universal Power Rail with end caps and cover, 3 conductors, length: 0.8 m
	**K-DUCT-BU**	Profile rail, wiring comb field side, blue
	**K-DUCT-BU-UPR-03**	Profile rail with UPR-03- * insert, 3 conductors, wiring comb field side, blue

Accessories

	**KF-ST-5GN**	Terminal block for KF modules, 3-pin screw terminal, green

Release date: 2021-11-25 Date of issue: 2021-11-25 Filename: 231222_eng.pdf

Accessories

	**KF-ST-5BU**	Terminal block for KF modules, 3-pin screw terminal, blue
	**KF-CP**	Red coding pins, packaging unit: 20 x 6

Release date: 2021-11-25 Date of issue: 2021-11-25 Filename: 231222_eng.pdf

Application

Single or parallel connection of strain gauges with resulting resistance between 116 Ω ... 10 kΩ can be connected and will provide a 4 mA ... 20 mA output and 2 relay outputs as well as an RS 485 interface in the safe area.

The device supports the transmission of measured values via the RS 485 interface. In this mode of operation, input signal range may be transmitted with 26 Bit resolution with up to 31 signal converters connected to the Power Rail UPR-05 or via terminals 19, 20 and 21.

RS 485 communication may be done via the Power Rail when using power feed modules with bus access, e. g. KFD2-EB2.R4A.B or via the terminals 19, 20 and 21 of one module. The device is addressed via keypad and display or with a PC with PACTware and adapter K-ADP-USB.

For additional information, refer to the manual and www.pepperl-fuchs.com.

Release date: 2021-11-25 Date of issue: 2021-11-25 Filename: 231222_eng.pdf